Measuring propagation properties of electromagnetic waves in coaxial cables

Jonas Beck and Jonathan Bodky

We examined the behaviour of signal pulses in a coaxial cable after reflection at different terminal resistances and measured its wave impedance by impedance matching. The damping coefficient was calculated by superposing an incident wave of known amplitude and a damped reflection from the other end of the cable, resulting in a standing wave with nonzero nodes. We measured the propagation velocity in the coaxial cable by runtime measurement and by measuring pairs of wavelength and frequency of standing waves. The velocities show a nonlinear dispersion relation, as they increase with frequency. From the velocities, relative permittivities are calculated. In addition, the much slower propagation velocity of a retardation cable was measured by runtime measurement as well.

Executed: 12th January, 2022
Submitted: 19th January, 2022

1 Introduction

Transmitting signals without loss is a non trivial, yet very important task in all branches of science and technology. A well established method is using coaxial cables, as they shield the signal from outside fields and are easy to manifacture. They can be found everywhere, from TV cables in homes to modern lab equipment.
In this paper, we want to examine signals travelling through such cables by measuring their wave form, propagation velocity and reflection coefficient at the end of such a cable.

2 Coaxial cable

A coaxial cable consists of a thin wire, usually made of copper, that is surrounded by an insulator (with relative permittivity ϵ_r), which again is surrounded by a cylindrical wire (in practice, this is for example a copper mesh) and then again insulated to the outside (see Fig. 1). In such a cable, a signal is not transmitted via an electric current, but through electromagnetic waves travelling through the inside of the wire. That way, the signal is shielded from outside fields, so interference and data loss are reduced.

Neglecting the ohmic resistance of the cable, the transmission behavior of a coaxial cable is characterized by the nonzero capacitance C^* and inductance L^* per unit length. For this reason, following maxwells equations, voltage and current in the cable are given by

$$\frac{\partial^2 U}{\partial x^2} = L^* C^* \frac{\partial^2 U}{\partial t^2}$$
$$\frac{\partial^2 I}{\partial x^2} = L^* C^* \frac{\partial^2 I}{\partial t^2}$$

describing a wave with the propagation velocity

$$v = \frac{1}{\sqrt{L^* C^*}}. \tag{1}$$

By inserting the expressions for L* and C* for a coaxial cable with relative permittivity ϵ_r and relative magnetic permeability μ_r we obtain

$$v = \frac{c}{\sqrt{\mu_r \epsilon_r}}, \tag{2}$$

where c is the speed of light in vacuum. Though there is negligible ohmic resistance, coaxial cables still have an impedance of

$$Z = \sqrt{\frac{L^*}{C^*}} \tag{3}$$

and the reflection coefficient ρ, which describes the ratio between the amplitude of the incident and the

reflected wave, is given by

$$\rho = \frac{R - Z}{R + Z} \tag{4}$$

where R is a terminating resistor at the end of the cable.

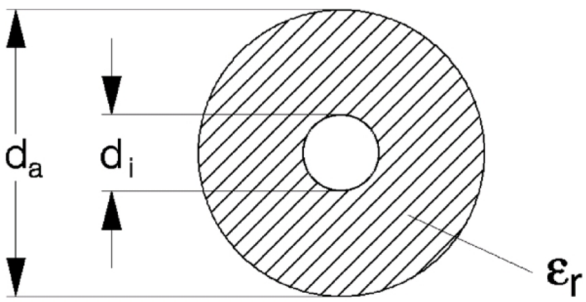

Fig. 1: Profile of a coaxial cable with an inner wire of diameter d_i, insulator of relative permittivity ϵ_r and an outer wire of diameter d_a [1].

3 Experimental setup

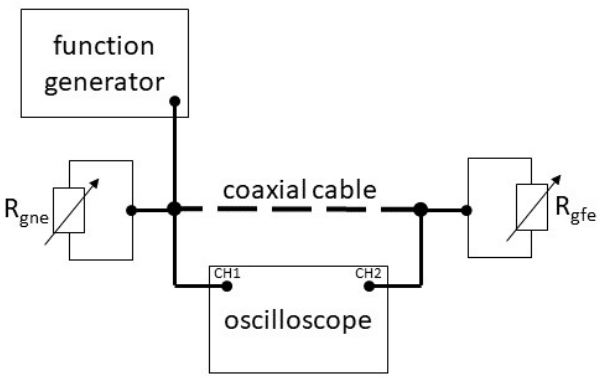

Fig. 2: Circuit diagram of the experimental setup. A coaxial cable is capped with terminal resistors and connected to an oscilloscope as well as a function generator.

For all measurements where we do not state differently we used modifications of the setup depicted in Fig. 2. A junction box was connected to each side of a 50 m long coaxial cable. On one side (referred to as the generator near end (gne) of the cable) a signal generator of the type Keysight 33220A (with an output impedance of $R_\mathrm{gen} = 50\,\Omega$ matching that of the coaxial cables) was connected, as well as CH1 of a Tektronix TDS 1001B two-channel oscilloscope (with an input impedance of $R_\mathrm{osc} = 1\,\mathrm{M}\Omega$) and a resistor R_gne. As resistors we used short circuit plugs ($R = 0$), an end plug (which is just an ohmic resistor of $R = 50\,\Omega$ matching the impedance of the cable) as well as variable resistors of different types (see section 5 for details) or no resistor at all (open end) for $R = \infty$.
The other side (referred to as the generator far end (gfe) of the cable) was connected to CH2 of the oscilloscope with a free space for another resistor R_gfe of the types descriped above.
The generator was set to generate 30 ns pulses with the highest possible voltage of 10 V at a frequency of $f = 200\,\mathrm{kHz}$.

4 Waveforms in a coaxial cable

In this section we examine the form of electromagnetic waves. We first look at some pulses reflected at different resistors and then model the superposition of waves to form a standing wave with a special function generator and the addition function of the oscilloscope.

4.1 Reflected wave pulses

We take the unaltered setup from section 3 and take pictures of the reflected waves for some of the possible combinations of $R_\mathrm{gne}, R_\mathrm{gfe} \in \{0, 50\,\Omega, \infty\}$.
To examine the influence of the resistor at the generator far end, we first fix $R_\mathrm{gne} = 50\,\Omega$ to avoid reflection from the generator near end. Now we take pictures for all three R_gfe.

We start with an open generator far end, for which $R_\mathrm{gfe} = \infty$. Following eq. 4 we expect the signal to be completely reflected, while the amplitude at the open end should be twice that of the incoming signal. While Fig. 3 does not show these exact ratios due to damping of the signal, it qualitatively confirms the described effects. The initial signal in Fig. 3 on CH1 shows deformations, the same applies to the other figures in this section. These can be explained by taking the capacitance und inductance of the used cables into account, which effectively form a resonant circuit. The shown initial signal is the superposition of this circuits transient response and the signal coming from the signal generator.

If we use a short circuit plug at the generator far end, the reflected signal is just the incoming one but inverted, following eq. 4. The amplitude at the generator far end of the cable (CH2) vanishes as we force a node with the short circuit plug. This behavior is shown in Fig. 4, where the amplitude of the reflected signal is smaller due to damping.

In technical applications of coaxial cables, the desired case is no reflections, as these can interfere with other signals or themselves be mistaken as a trans-

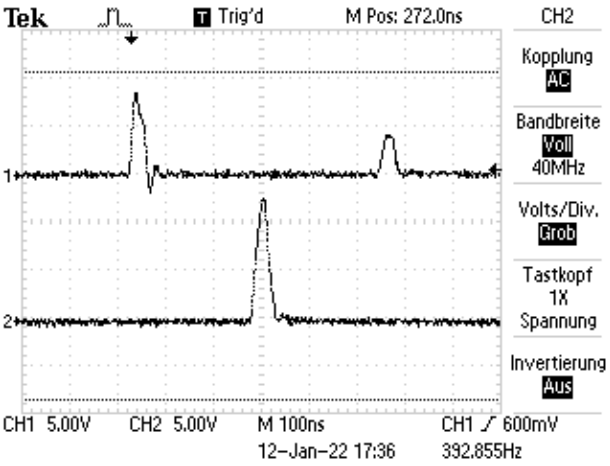

Fig. 3: Measurements at both ends of a coaxial cable for $R_{\mathrm{gne}} = 50\,\Omega$ and $R_{\mathrm{gfe}} = \infty$. The signal is reflected completely but damped due to the cable itself (CH1). The amplitude at the generator far end of the cable (CH2) is higher than the incoming signal.

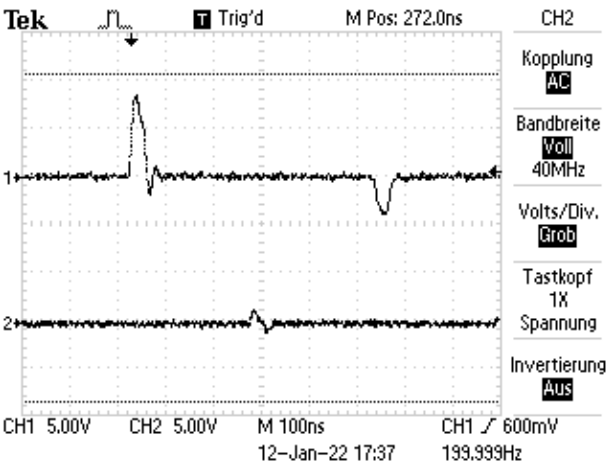

Fig. 4: Measurements at both ends of a coaxial cable for $R_{\mathrm{gne}} = 50\,\Omega$ and $R_{\mathrm{gfe}} = 0$. The reflected signal is inverted (CH1) and we get nearly no amplitude at the generator far end of the cable (CH2).

mitted signal instead of a reflection. Looking at eq. 4, we get vanishing reflection exactly for $R = Z$, in our case $Z \approx 50\,\Omega$. Using a $R_{\mathrm{gfe}} \approx 50\,\Omega$ resistor at the generator far end, we expect close to no reflection and the amplitude at the generator far end should be just that of the incoming wave, as there is no superposed reflection. Aside from the damping of the signal on CH2, Fig. 5 shows the described features.

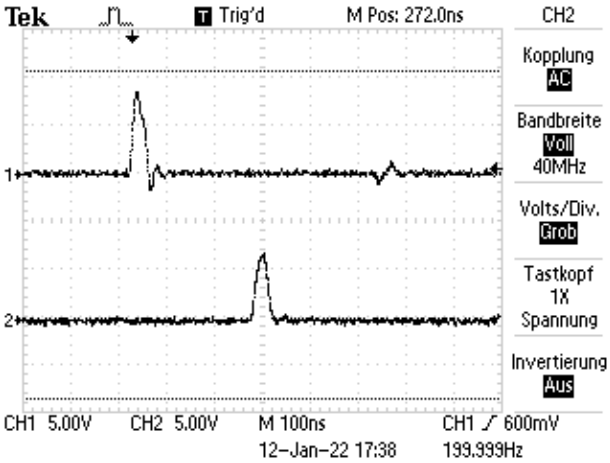

Fig. 5: Measurements at both ends of a coaxial cable for $R_{\mathrm{gne}} = 50\,\Omega$ and $R_{\mathrm{gfe}} = (48,2 \pm 1,1)\,\Omega$. There is hardly any reflection (CH1), the signal at the generator far end of the cable (CH2) is just the damped signal from the generator.

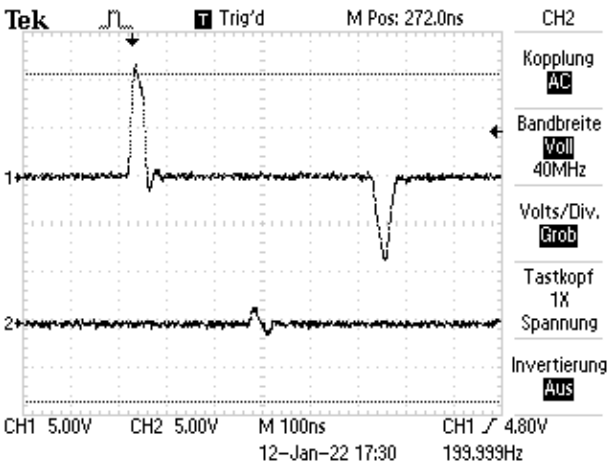

Fig. 6: Measurements at both ends of a coaxial cable for $R_{\mathrm{gne}} = \infty$ and $R_{\mathrm{gfe}} = 0$. Compared to the same measurement with $R_{\mathrm{gne}} = 50\,\Omega$, the generator near signal on CH1 has roughly twice the amplitude.

If we remove the end plug near the generator to examine the influence of the resistor at this end, the only resistor left there is the input impedance of the oscilloscope $R_{\mathrm{osc}} = 1\,\mathrm{M}\Omega \gg Z$. According to eq. 4

this leads to an almost complete reflection of the signal and the measured voltage on (CH1) is twice the incoming one, as the reflection from the plug immediately interferes with the signal. Comparing Fig. 6 to Fig. 4, we see that the reflected pulse shows doubling in amplitude, as it experienced the same damping in both cases. The amplitude of the initial pulse is higher for the end plug removed, but not twice that of the case with an end plug. This could be caused by transient effects of the cable which also lead to the already mentioned deformation of the initial signal.

4.2 Standing waves

This section uses a different setup. The two outputs of a special function generator generating two opposing sine waves of equal velocity and variable amplitudes are directly connected to the input channels of the oscilloscope and internally added pointwise. As shown in appendix 9.1, the superposition of two opposing waves with the same frequency results in a standing wave. If the amplitude of the initial waves is equal, the standing wave has nodes with amplitude zero, if not, some amplitude always remains. Exactly this behavior was visualised in the experiment, an example of which is shown in Fig. 7.

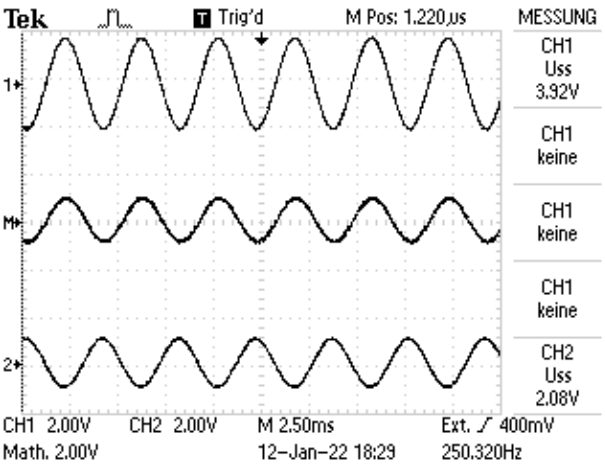

Fig. 7: Standing wave as a superposition of two opposing waves with the same frequency but different amplitudes. The shown amplitude is the non-vanishing minimum amplitude, which is $|U_1 - U_2|$.

5 Wave impedance in a coaxial cable

We confirm the specification of the coaxial cable stating a wave impedance of $Z = 50\,\Omega$ by choosing $R_{\text{gne}} = 50\,\Omega$ fixed (for this measurement the value of R_{gne} is not important, so for convenience the resistor on the generator near end was chosen as the wave impedance of the cable) and varying R_{gfe}. According to eq. 4, the reflected pulse disappears for $R_{\text{gfe}} = Z$. For a variety of resistors, the values of R_{gfe} where the reflected pulse is minimal are given in Tab. 1.

resistor	resistance $R(\rho = 0)$ [Ω]
carbon film potentiometer	$50,4 \pm 1,1$
wire wound potentiometer	$43,3 \pm 1,0$
resistance decade	$50,0 \pm 1,1$
short circuit plug	-
$50\,\Omega$ end plug	$48,2 \pm 1,1$

Tab. 1: Impedance of a coaxial cable measured with different types of resistors by impedance matching.

The different values coincide within their measure of uncertainty except for the wire wound potentiometer. For this, it was not possible to achieve completely vanishing reflection, so we assume that eq. 4 does not hold here. This could be caused by a capacitive impedance of the potentiometer, but without further measurement this can not be confirmed.
The resulting value for the impedance of the cable is calculated as a weighted mean to be $Z = (49,53 \pm 0,64)\,\Omega$, neglecting the measurement using the wire wound potentiometer due to its systematic error. This result coincides with the given factory specification of $Z = 50\,\Omega$ within its margin of error.

6 Propagation velocity of waves in a coaxial cable

6.1 Runtime measurement

To measure the propagation velocity in the cable, the setup from section 3 with $R_{\text{gne}} = 50\,\Omega$ and $R_{\text{gfe}} = \infty$ (open end) was used to reflect a signal pulse and measure the time Δt it takes the signal to travel through the cable twice. Times were measured at the rising edge of the pulse with the oscilloscope. From this time and the given length $l = 50\,\text{m}$ of the cable, we can calculate the propagation velocity by

$$v = \frac{2l}{\Delta t} \tag{5}$$

to be $v_{\text{cable, runtime}} = (1,923 \pm 0,052) \cdot 10^8\,\frac{\text{m}}{\text{s}}$ at a frequency of $f = 200\,\text{kHz}$. This corresponds to a relative permittivity of $\epsilon_r = 2,43 \pm 0,13$ according to

eq. 2, assuming $\mu_r = 1$. The same method was used to measure the propagation velocity in a retardation cable of length $l_{\text{ret}} = (48 \pm\ 4)$ cm. Due to the stronger damping effects in this cable we had to use a lower frequency of $f \approx 8\,\text{Hz}$. For this we received $v_{\text{ret, runtime}} = (4,95 \pm 0,87) \cdot 10^5\ \frac{\text{m}}{\text{s}}$. The difference between these two values can be explained by the used materials. The retardation cable contains materials with a high relative magnetic permeability, leading to a high inductance per unit length L* which, following eq. 1, results in a lower velocity compared to the standard coaxial cable for which $\mu_r \approx 1$.

6.2 Measurement with standing waves

The propagation velocity of the wave can also be calculated via

$$v = f \cdot \lambda \tag{6}$$

where f is the frequency and λ is the wavelength of the wave. As the frequency of the wave can be set in the signal genererator, only the wavelength needs to be determined. This can be done by using standing waves: their nodes are localised in distances of $\frac{\lambda}{2}$, thus by counting the nodes inside the cable and knowing the length l of the cable, the wavelength can be determined.

Standing waves, as modelled in section 4.2, can be created in an actual coaxial cable by sending a sine wave throug it and reflecting it on the generator far end. This was done with $R_{\text{gfe}} \in \{0, \infty\}$, where for $R_{\text{gfe}} = 0$ there is a node at the generator far end of the cable (eq. 4) and thus the first node that appears at the generator near end when the frequency is increased is at $l = \frac{\lambda}{2}$. For $R_{\text{gfe}} = \infty$ on the other hand, there is an antinode at the generator far end of the cable (eq. 4) and thus the first node that appears at the generator near end when the frequency is increased is at $l = \frac{\lambda}{4}$ and the second node appears at $l = \frac{3\lambda}{4}$.
The frequencies at which nodes occured at the generator near end are given in Tab. 2 with the corresponding propagation velocities, calculated using eq. 6, and the relative permittivity, calculated with eq. 2 assuming $\mu_r = 1$.

The data shows an increase of the propagation velocity and a decrease of the relative permittivity for higher frequencies, meaning the propagation velocity follows a nonlinear dispersion. Comparing ϵ_r to the literature, the used dielectric is assumed to be polyethylene which has a relative permittivity of $2,2 - 2,4$ at 1 MHz, depending on its density [4] and is widely used in coaxial cables [5].

f [MHz]	v_{stand} [$10^8\,\frac{\text{m}}{\text{s}}$]	ϵ_r
0,96660±0,00040	1,93320±0,00080	2,4048±0,0020
1,94280±0,00066	1,94280±0,00066	2,3811±0,0016
2,9262±0,00066	1,95080±0,00044	2,3617±0,0011

Tab. 2: Propagation velocities and relative permittivities of a coaxial cable for different frequencies.

7 Damping in coaxial cables

Contrary to the assumption of a vanishing ohmic resistance made in section 2, the used cable has a nonzero ohmic resistance which leads to an exponential decrease of the amplitude of the transmitted signal.
The strength of this damping effect is characterized by the damping coeffcient D^*, defined as

$$D^* = 20 \cdot \frac{1}{x} log_{10} \frac{U(0)}{U(x)}\, dB, \tag{7}$$

which generally depends on the frequency of the signal.
We use the same experimental setup as in section 6.2 to measure the minimal amplitude of the standing wave at the generator near end of the cable. As we have a superposition of two opposing waves with the same frequency but different amplitudes, the measured voltage is just $|U(0) - U(2l)|$ according to eq. 10. Since $U(0)$ is also given through the settings of the signal generator this allows us to calculate D^* for different frequencies. The obtained values are given in Tab. 3.

f [MHz]	D^* [$10^{-3}\,\frac{dB}{\text{m}}$]
$0,96660 \pm 0,00040$	$5,52 \pm 0,16$
$1,94280 \pm 0,00066$	$8,31 \pm 0,32$
$2,9262 \pm 0,00066$	$9,83 \pm 0,31$

Tab. 3: Damping coefficients of a coxial cable for different frequencies.

The data shows that signals with a higher frequency experience stronger damping, the cable acts as a low-pass filter due to its intrinsic capacitance.

8 Conclusion

In this paper we examined the behaviour of electromagnetic pulses in a coaxial cable. We found that

they are reflected at a junction if the wave impedances are not matched. At a boundary from high to low impedance (e.g. a short circuit plug at the end of the cable), the reflected signal changes its sign, at a boundary from low to high impedance it does not. For matched impedance there is no reflection, while any terminal resistance that is not exactly the cable impedance shows an interpolated behavior. This follows exactly the theory shown at the beginning of the paper.

The wave impedance of our cable was measured as the terminal resistance where reflection vanished to be $Z = (49,53 \pm 0,64)\,\Omega$, which is consistent with the factory specification of the cable.

To calculate the damping coefficient, a standing sine wave was created by reflecting the signal at the generator far end of the cable, and the frequency was tuned such that a node at the generator near end of the cable appeared, where the minimal amplitude was measured. From this and the known amplitude of the generator signal, the damping coefficient was calculated for different frequencies, showing an increase with frequency.

Measuring the runtime it takes a pulse of frequency $f = 2\text{kHz}$ to travel through a cable of known length, be reflected and travel back, we calculated the propagation velocity in our coaxial cable to be $v_{\text{cable, runtime}} = (1,923 \pm 0,052) \cdot 10^8\,\frac{\text{m}}{\text{s}}$ and in a retardation cable for $f \approx 8\,\text{Hz}$ to be $v_{\text{ret, runtime}} = (4,95 \pm 0,87) \cdot 10^5\,\frac{\text{m}}{\text{s}}$. The propagation velocity was also measured with standing waves by finding frequencies where the first nodes occured at the generator near side of the cable. As at this point, the wavelength is given as an integer fraction of four times the length of the cable, the propagation velocity could be calculated for different frequencies. Comparing all the velocity measurements we found a nonlinear dispersion, as propagation velocity increases with frequency. Calculating the relative permittivity of the cable, we assume that its insulating material is made of polyethylene.

References

[1] Physikalisches Grundpraktikum, Universität Würzburg, Modul C2, Versuch 41, “Messung der Ausbreitungsgeschwindigkeit von elektromagnetischen Wellen auf Kabeln“, 2021

[2] Meschede, Dieter, Gerthsen Physik, 25. Auflage, Springer-Verlag, Berlin, 2015

[3] E. Tiesinga *et al.*, “CODATA recommended values of the fundamental physical constants: 2018“, Rev. Mod. Phys. 93, 025010 (2021)

[4] `https://www.professionalplastics.com/professionalplastics/ElectricalPropertiesofPlastics.pdf`, last visited 17.01.2022

[5] `https://www.rfcafe.com/references/electrical/coax-chart.htm`, last visited 17.01.2022

9 Appendix

9.1 Exercises from the instruction [1]

9.1.1 Numerical example of wave propagation in a cable

In this section we will look at a 50 m coaxial cable with a capacitance of $C^* = 100\,\frac{\mathrm{pF}}{\mathrm{m}}$ and an inductance of $L^* = 15 \cdot 10^{-8}\,\frac{\mathrm{H}}{\mathrm{m}}$, where the outer diameter is linked to the inner diameter by $d_a = 3d_i$.

Following the equations in the instructions [1], we find for the time it takes a signal to travel through our cable

$$\Delta t = \frac{\Delta x}{v} = \sqrt{L^* C^*}\Delta x = 0,25\,\mathrm{ms}.$$

For the relative permittivity we find

$$\epsilon_r = L^* C^* c^2 = 2,25.$$

With this result and the assumption that $\mu_r = 1$, we can calculate the characteristic impedance

$$Z = \sqrt{\frac{\mu_r}{\epsilon_r}\frac{\mu_0}{\epsilon_0}}\frac{1}{2\pi}\ln\frac{d_a}{d_i} = 44,0\,\Omega$$

and solving the same equation for $\frac{d_a}{d_i}$ to produce a cable with an impedance of $Z = 50\,\Omega$ results in

$$\frac{d_a}{d_i}\big(Z = 50\,\Omega\big) = 3,54.$$

9.1.2 Mathematical description of waves

The most simple form of a wave is the monochromatic harmonic real valued wave given by

$$y(x,t) = a \cdot \sin 2\pi\nu\Big(t - \frac{x}{c}\Big). \tag{8}$$

The wavelength λ is defined as the smallest length satisfying $y(x,t) = y(x+\lambda,t), \forall x,t$. Plugging this into the wave equation results in the important relation

$$c = \lambda\nu,$$

where c is the propagation velocity of the wave.

Adding up two waves of the form in eq. (8), we can first look at the special case where the amplitudes $a_1 = a_2 =: a$ are the same and only the frequencies differ

$$\begin{aligned} y &= y_1 + y_2 \\ &= 2a\cos\Big(2\pi\nu^*\big(t - \frac{x}{c}\big)\Big)\sin\Big(2\pi\nu\big(t - \frac{x}{c}\big)\Big) \end{aligned} \tag{9}$$

with $\nu^* := \frac{\nu_2 - \nu_1}{2}$ and $\nu := \frac{\nu_2 + \nu_1}{2}$. This describes a wave with amplitude $2a$, frequency ν and an envelope of the frequency ν^*, where at the nodes of the envelope, the amplitude vanishes completely. Considering the superposition of two waves of the form in eq. 8 with the same frequency ν but different amplitudes a_1 and a_2, we find

$$\begin{aligned} y &= y_1 + y_2 \\ &= (a_1 + a_2)\cos(kx)\sin(\omega t) \\ &+ (a_1 - a_2)\sin(kx)\cos(\omega t) \end{aligned} \tag{10}$$

where $k = \frac{2\pi\nu}{c}$ and $\omega = 2\pi\nu$. This is a superposition of standing waves with amplitudes $a_1 + a_2$ and $|a_1 - a_2|$ and a separation in phase of $\frac{\pi}{2}$. Thus, the envelope oscillates between the amplitudes $a_1 + a_2$ and $|a_1 - a_2|$.
Up to this point, we only considered waves with a linear dispersion and thus constant propagation speed. But in general, the propagation velocity is a function of wavelength $c = c(\lambda)$. Implementing different velocities $c_1 = c(\lambda_1)$ and $c_2 = c(\lambda_2)$ in eq. 9 and replacing $c_2 = c_1 - \Delta c$ as well as $\lambda_2 = \lambda_1 - \Delta\lambda$, where we look at the case of very similar propagation media such that $\Delta\lambda \ll \lambda_1$ and $\Delta c \ll c_1$, we find

$$\begin{aligned} y =& 2a\cos\Big(\pi\frac{(\lambda_1\Delta c - \Delta\lambda c_1)\cdot t + \Delta\lambda\cdot x}{\lambda_1^2}\Big) \\ &\cdot \sin\Big(2\pi\frac{c_1\cdot t - x}{\lambda_1}\Big). \end{aligned} \tag{11}$$

To compare this result with eq. 9, we can take the limit $\Delta c \to 0$ and approximate $\lambda_1\lambda_2 \approx \lambda_1^2$. Inserting $\nu_i = \frac{c_1}{\lambda_i}$, we receive exactly eq. 9.